Art. N30314

FORD TRANSIT
04/14➡

FORD TRANSIT COMBI
11/14➡

☐ L2 H2 L = 3300mm H = 2490mm	☑ L3 H2 L = 3750mm H = 2490mm	
☐ L2 H3 L = 3300mm H = 2729mm	☑ L3 H3 L = 3750mm H = 2729mm	☑ L4 H3 L = 3750mm H = 2729mm

- (I) ISTRUZIONI DI MONTAGGIO
- (GB) FITTING INSTRUCTIONS
- (D) MONTAGEANLEITUNG
- (F) INSTRUCTIONS DE MONTAGE
- (E) ISTRUCCIONES DE MONTAJE
- (P) INSTRUÇÕES DE MONTAGEM
- (NL) MONTAGE-INSTRUCTIES
- (S) MONTERINGSANVISNING
- (FIN) ASENNUSOHJE
- (EST) PAIGALDUSJUHEND
- (LAT) STIPRINĀŠANAS INSTRUKCIJA
- (LT) PRITVIRTINIMO INSTRUKCIJOS
- (PL) INSTRUKCJA MONTAŻU
- (RUS) Инструкции по установке
- (CZ) NÁVOD NA MONTÁŽ
- (SK) NÁVOD NA MONTÁŽ
- (SLO) NAVODILA ZA PRITRJEVANJE
- (HR) UPUTA ZA SASTAVLJANJE
- (H) A FELSZERELÉS MÓDJA
- (GR) Οδηγίε συναρμολόγηση
- (TR) MONTAJ TALIMATLARL
- (BG) ИНСТРУКЦИИ ЗА МОНТАЖ
- (SRB) UPUTSTVA ZA MONTAŽU

KIT x8

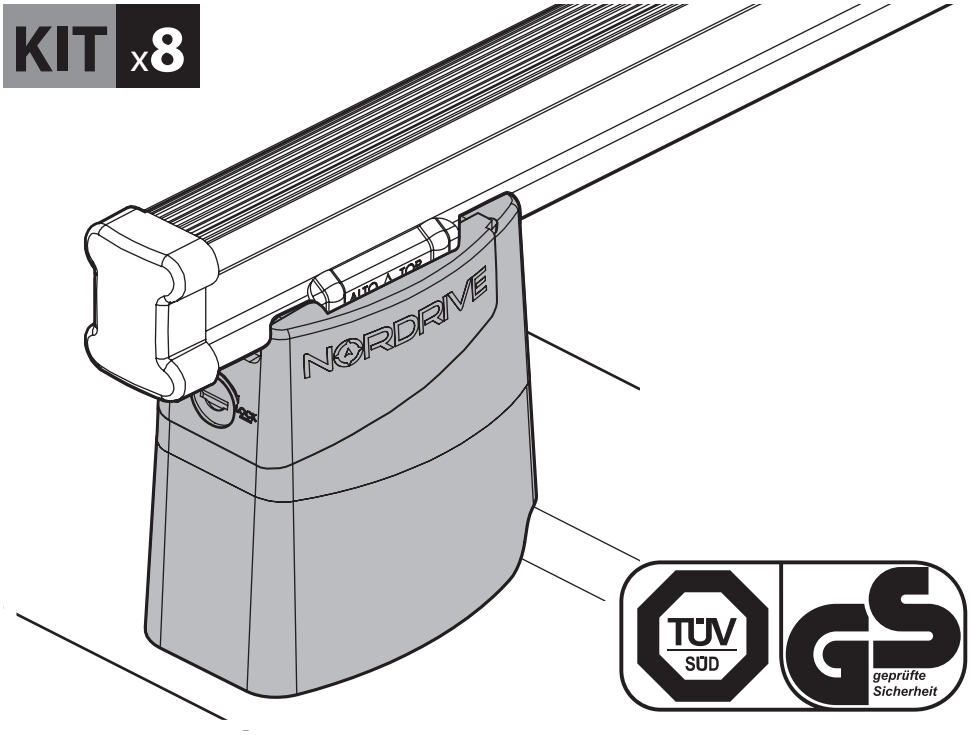

(I) ADATTO PER
(GB) SUITABLE FOR
(F) INDIQUÉ POUR
(D) GEEIGNET FÜR
(E) ADECUADA PARA

NORDRIVE
KARGO SERIES

OK A

Kargo
ACCIAIO
Steel

- (I) BARRE KARGO
- (GB) KARGO BARS
- (F) BARRES KARGO
- (D) DACH-LASTENTRÄGER KARGO
- (E) BARRES KARGO

Art. **N10015** x4

OK B

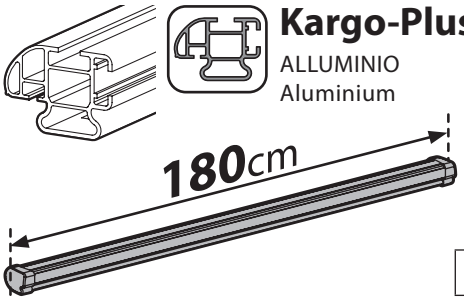

Kargo-Plus
ALLUMINIO
Aluminium

- (I) BARRE KARGO-PLUS
- (GB) KARGO-PLUS BARS
- (F) BARRES KARGO-PLUS
- (D) DACH-LASTENTRÄGER KARGO-PLUS
- (E) BARRES KARGO-PLUS

Art. **N10045** x4

OK C

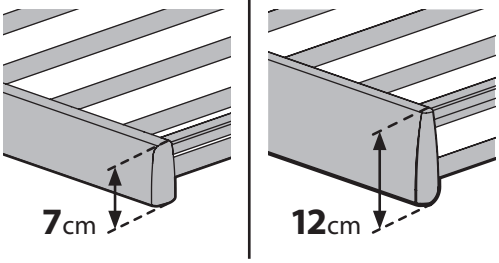

- (I) CESTE PORTATUTTO KRS-7 / KRS-12
- (GB) KRS-7 / KRS-12 VAN ROOF RACKS
- (F) GALERIE KRS-7 / KRS-12
- (D) DACHKÖRBEN KRS-7 / KRS-12
- (E) BACAS KRS-7 / KRS-12

NORDRIVE®
TRANSPORT SOLUTIONS

Contenuto • Content • Contenu • Inhalt • Contenido

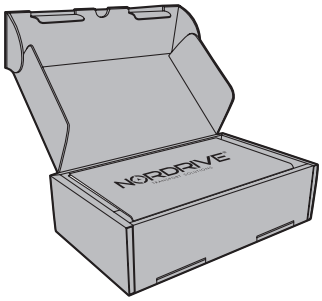

NORDRIVE®
TRANSPORT SOLUTIONS

Art. **N30314**

x8

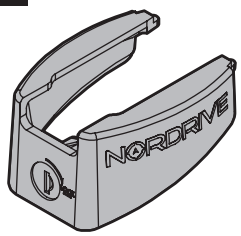

70PL001

x8

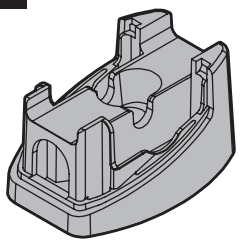

76PL001

x3

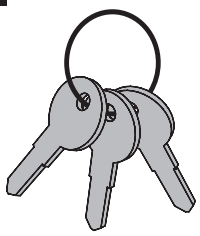

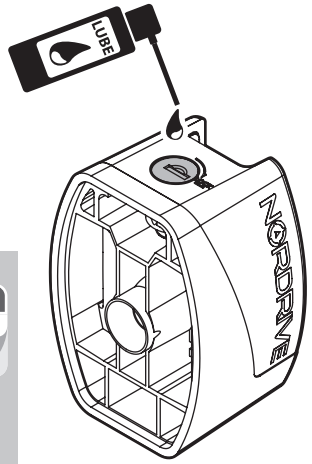

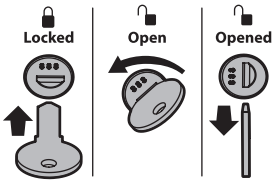

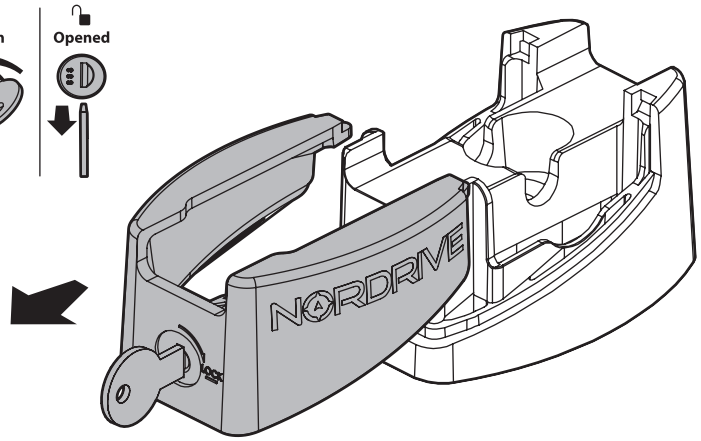

x8

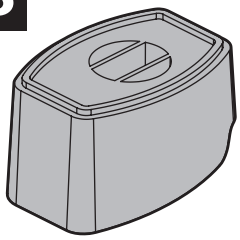

00PL084B

x16

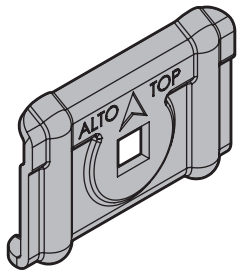

40FE001

x8

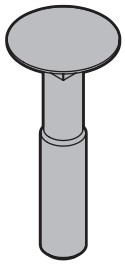

60BQ8045

x8

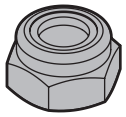

62BB0800

x8

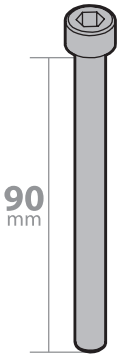

M8x90

60CE8090

x8

61ED0815

x8

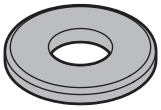

ø8 - ø16

61FN0816

x8

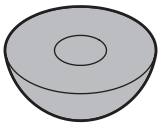

60RO003

x8

ø35 ø40

66OR35CN

x1

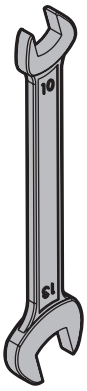

72FE0001

x1

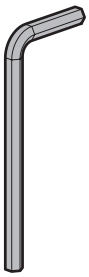

72FE0003

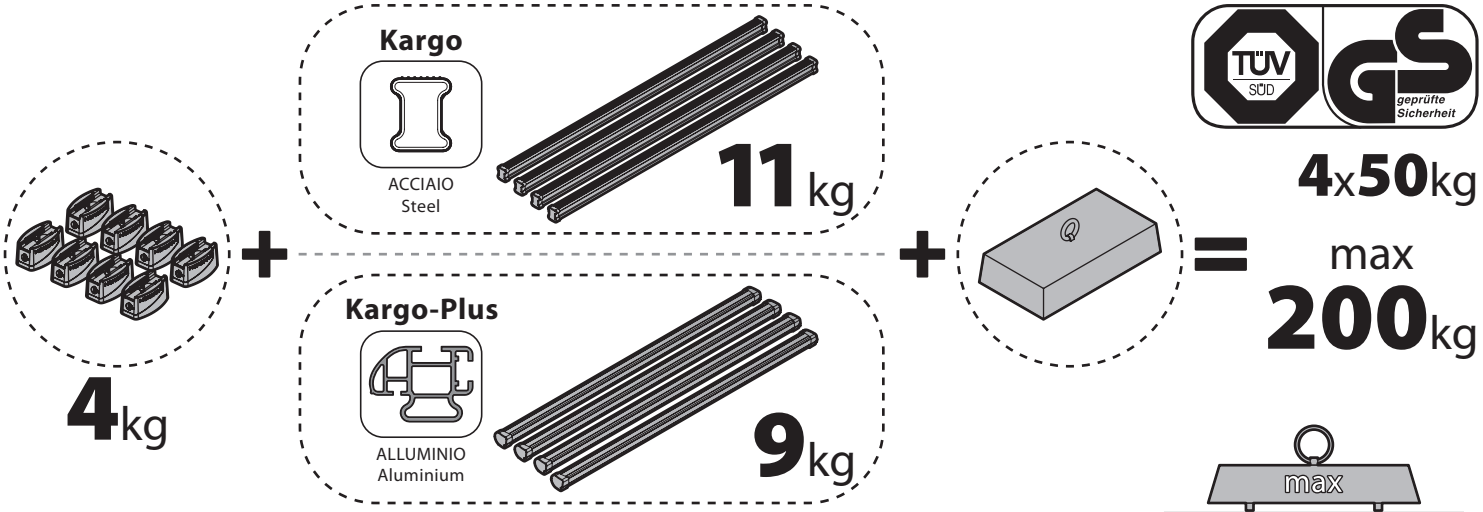

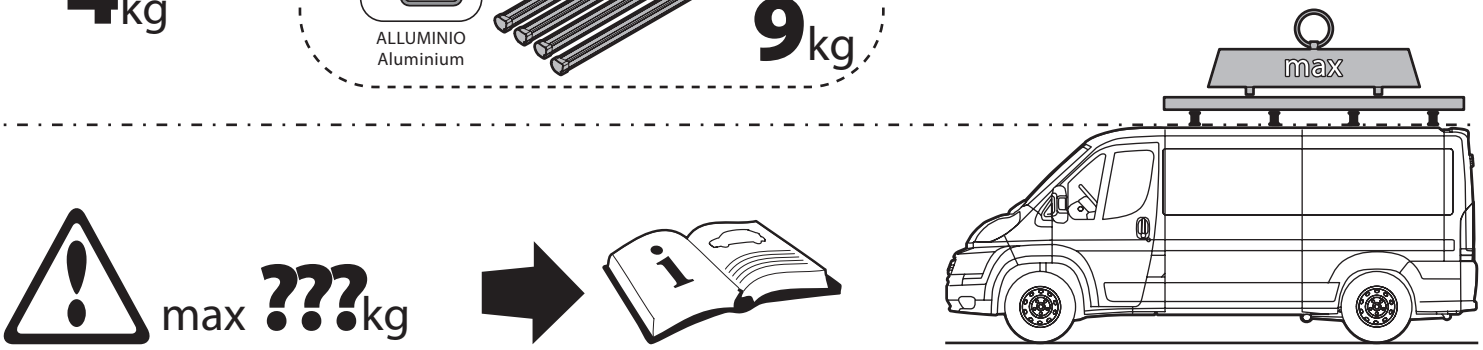

SAFETY REGULATIONS

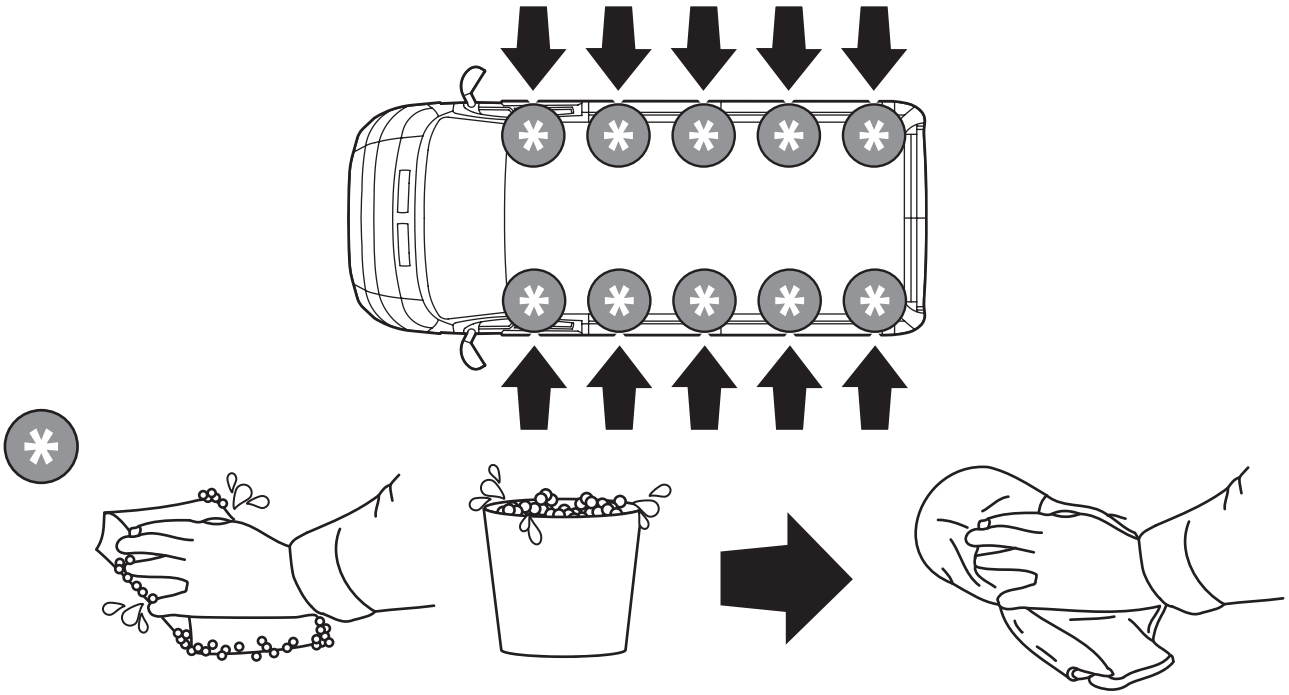

(I) ISTRUZIONI DI MONTAGGIO
(GB) FITTING INSTRUCTIONS
(D) MONTAGEANLEITUNG
(F) INSTRUCTIONS DE MONTAGE
(E) ISTRUCCIONES DE MONTAJE
(P) INSTRUÇÕES DE MONTAGEM
(NL) MONTAGE-INSTRUCTIES
(S) MONTERINGSANVISNING
(FIN) ASENNUSOHJE
(EST) PAIGALDUSJUHEND
(LAT) STIPRINĀŠANAS INSTRUKCIJA
(LT) PRITVIRTINIMO INSTRUKCIJOS
(PL) INSTRUKCJA MONTAŻU
(RUS) Инструкции по установке
(CZ) NÁVOD NA MONTÁŽ
(SK) NÁVOD NA MONTÁŽ
(SLO) NAVODILA ZA PRITRJEVANJE
(HR) UPUTA ZA SASTAVLJANJE
(H) A FELSZERELÉS MÓDJA
(GR) Οδηγίε συναρμολόγηση
(TR) MONTAJ TALIMATLARL
(BG) ИНСТРУКЦИИ ЗА МОНТАЖ
(SRB) UPUTSTVA ZA MONTAŽU

1

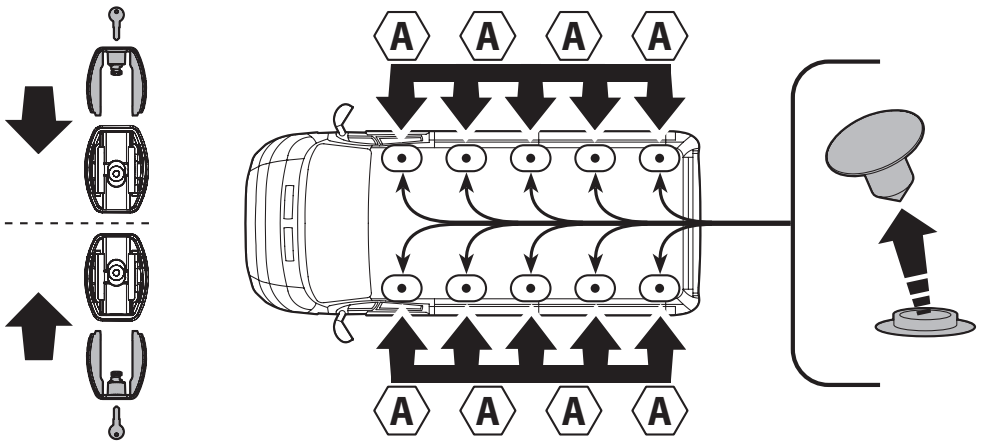

2 A

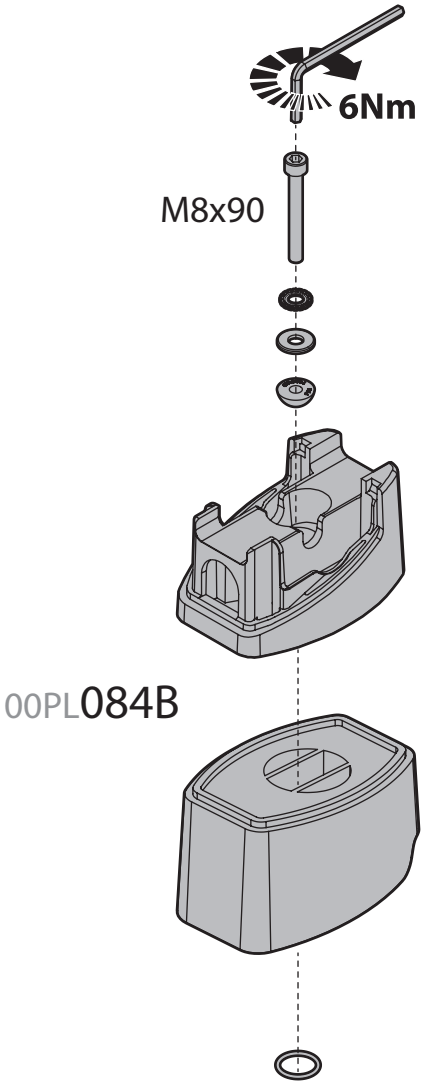

3

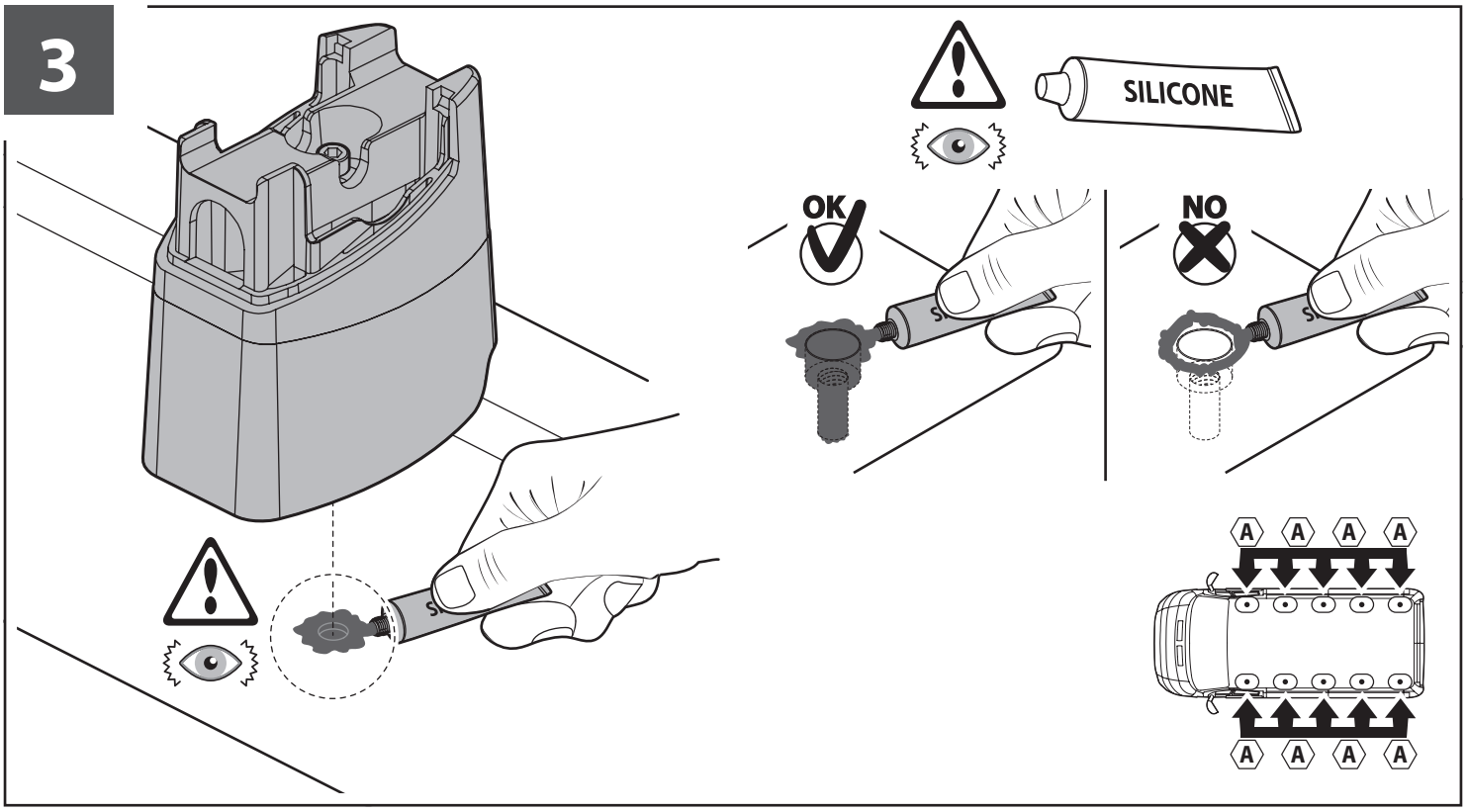

4

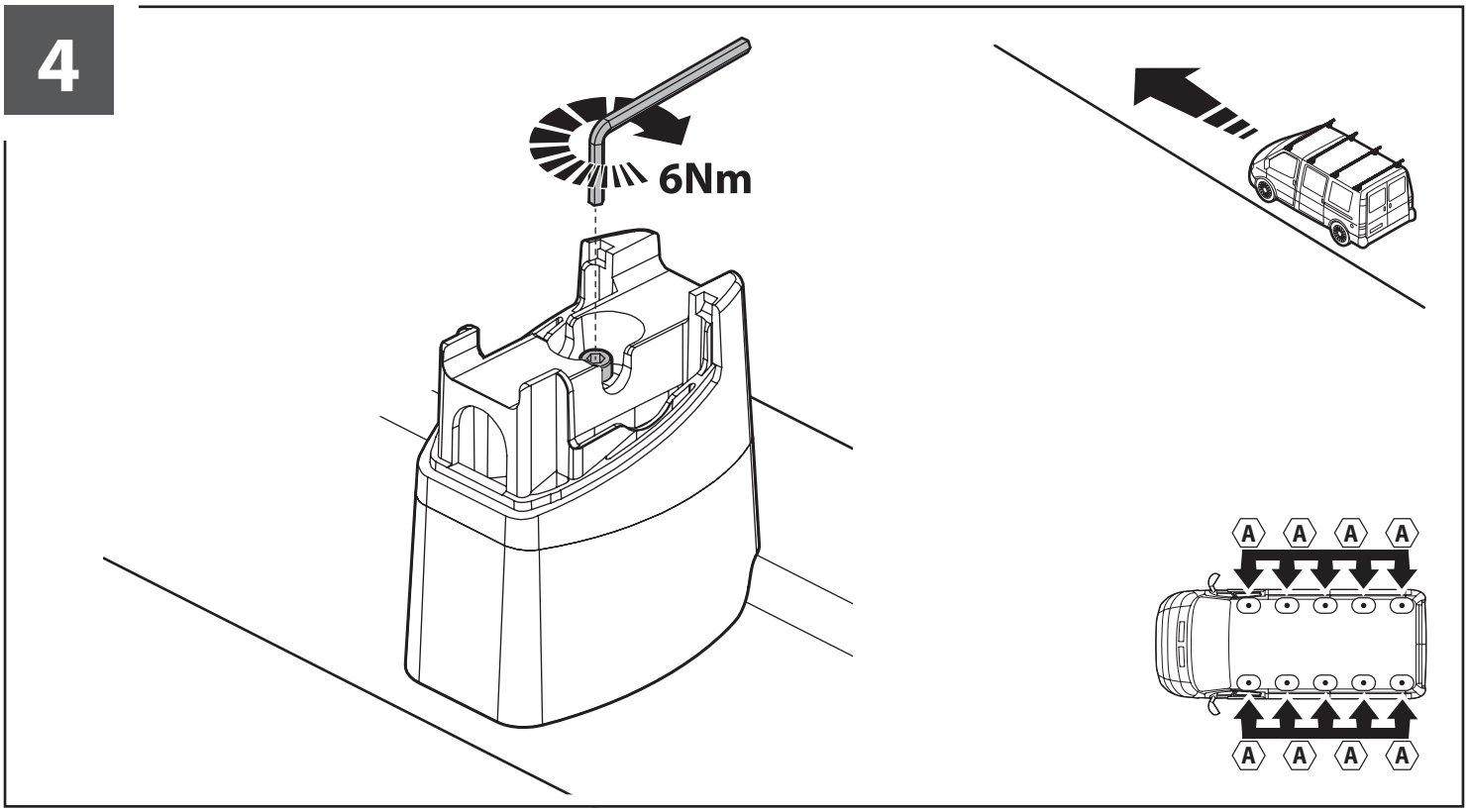

ATTENZIONE
WARNING

A Kargo

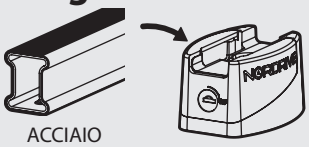

ACCIAIO
Steel

MONTAGGIO DIRETTO
SUI KIT PIEDI SPECIFICI
DIRECTLY ON FOOT KITS
BEFESTIGUNGSFÜSSE

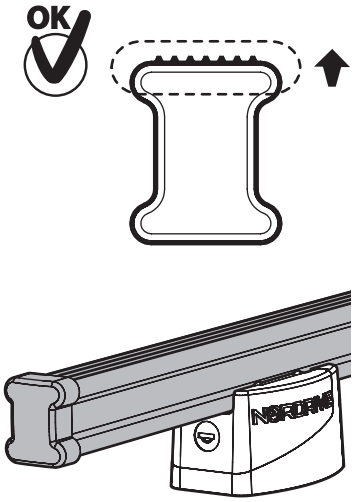

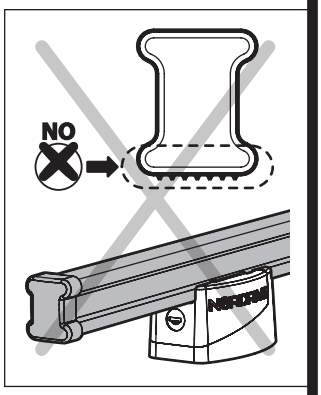

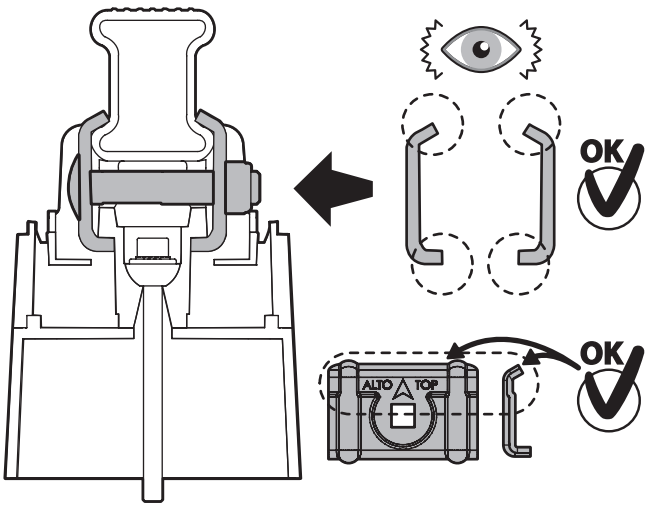

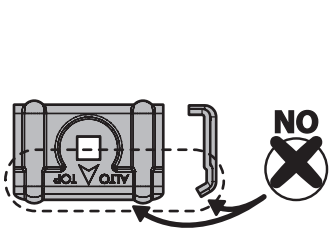

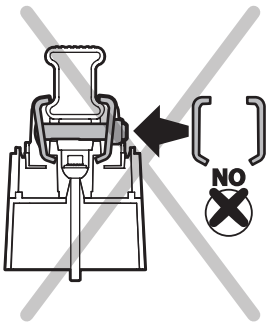

B Kargo-Plus

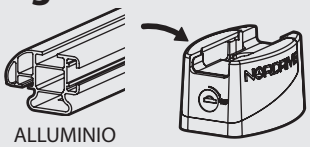

ALLUMINIO
Aluminium

MONTAGGIO DIRETTO
SUI KIT PIEDI SPECIFICI
DIRECTLY ON FOOT KITS
BEFESTIGUNGSFÜSSE

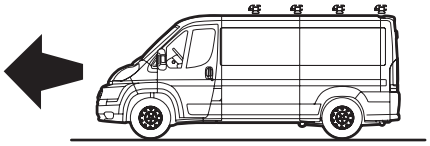

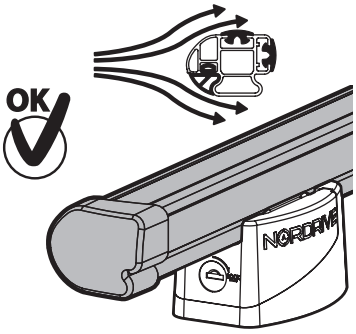

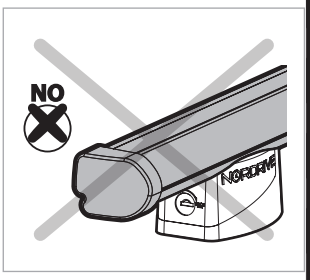

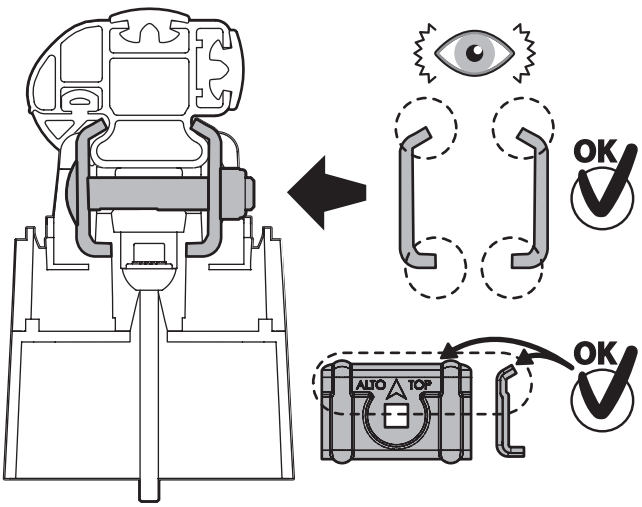

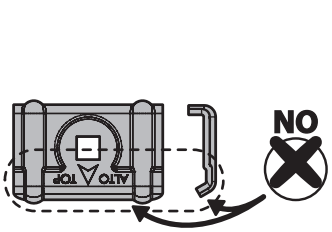

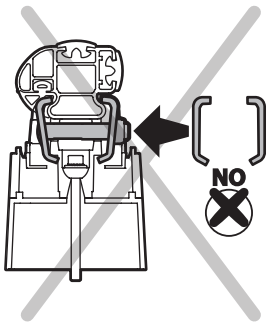

5

A **Kargo**

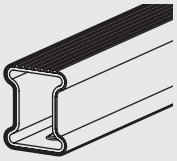

ACCIAIO
Steel

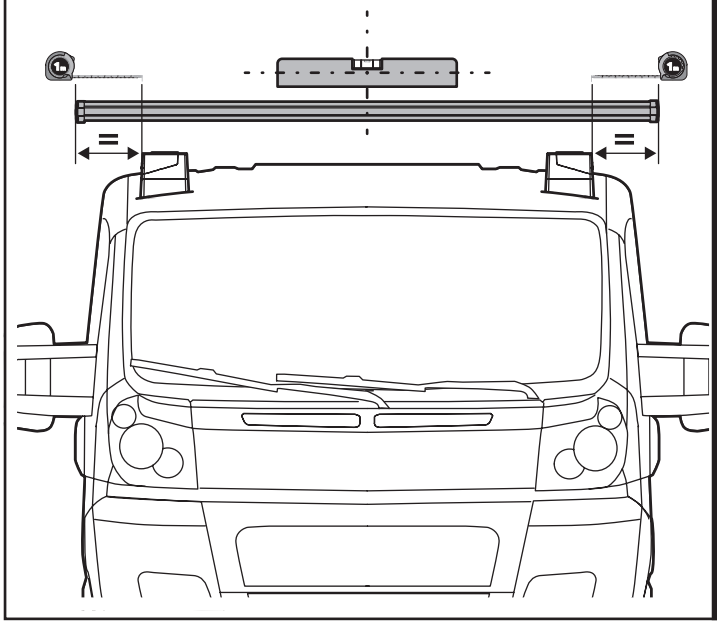

B **Kargo-Plus**

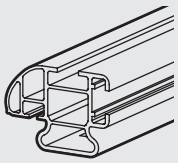

ALLUMINIO
Aluminium

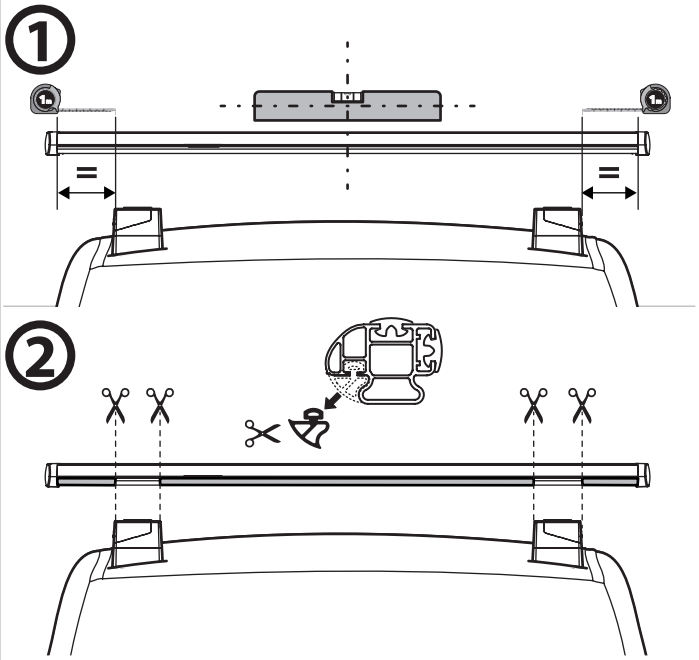

6

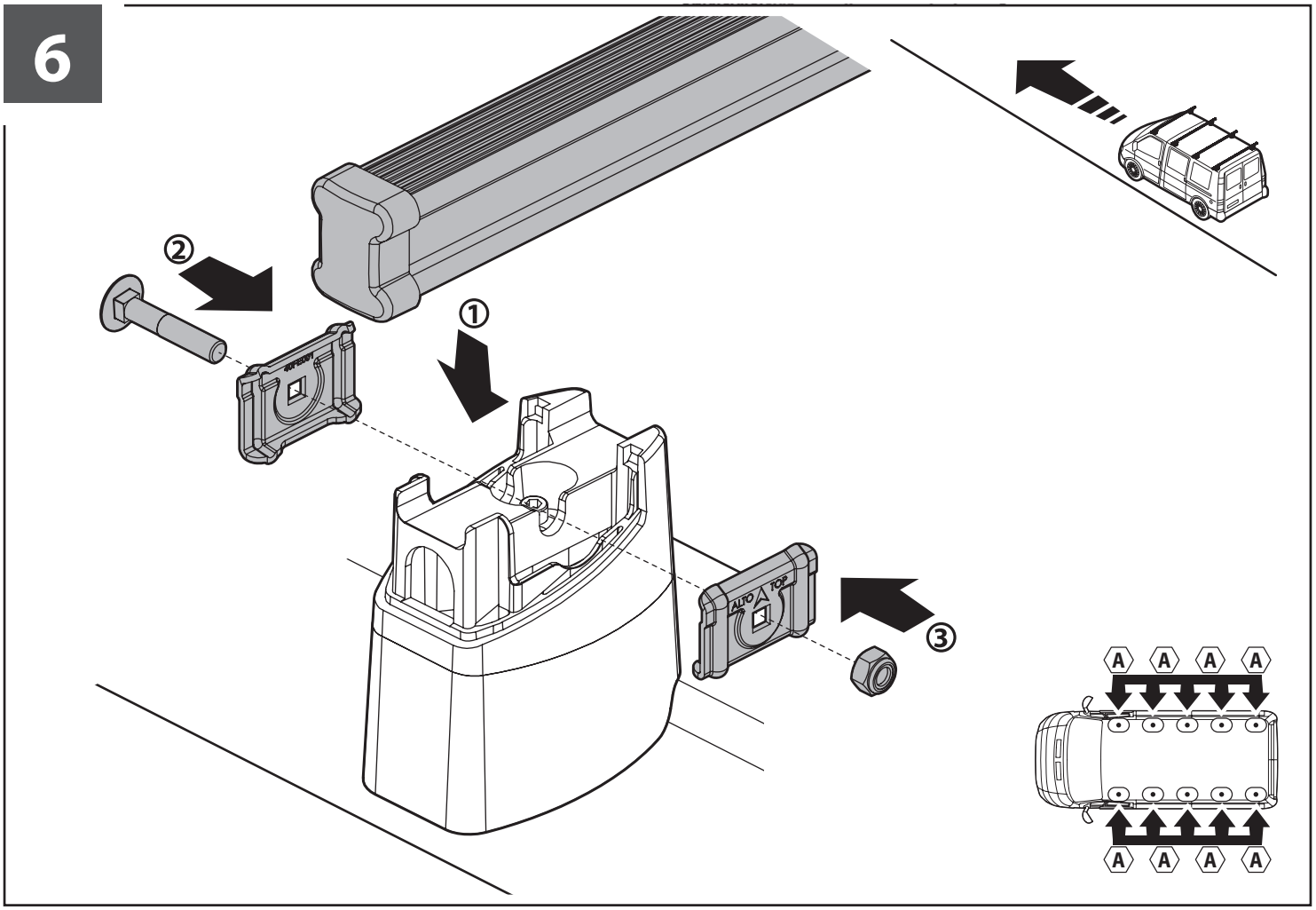

7

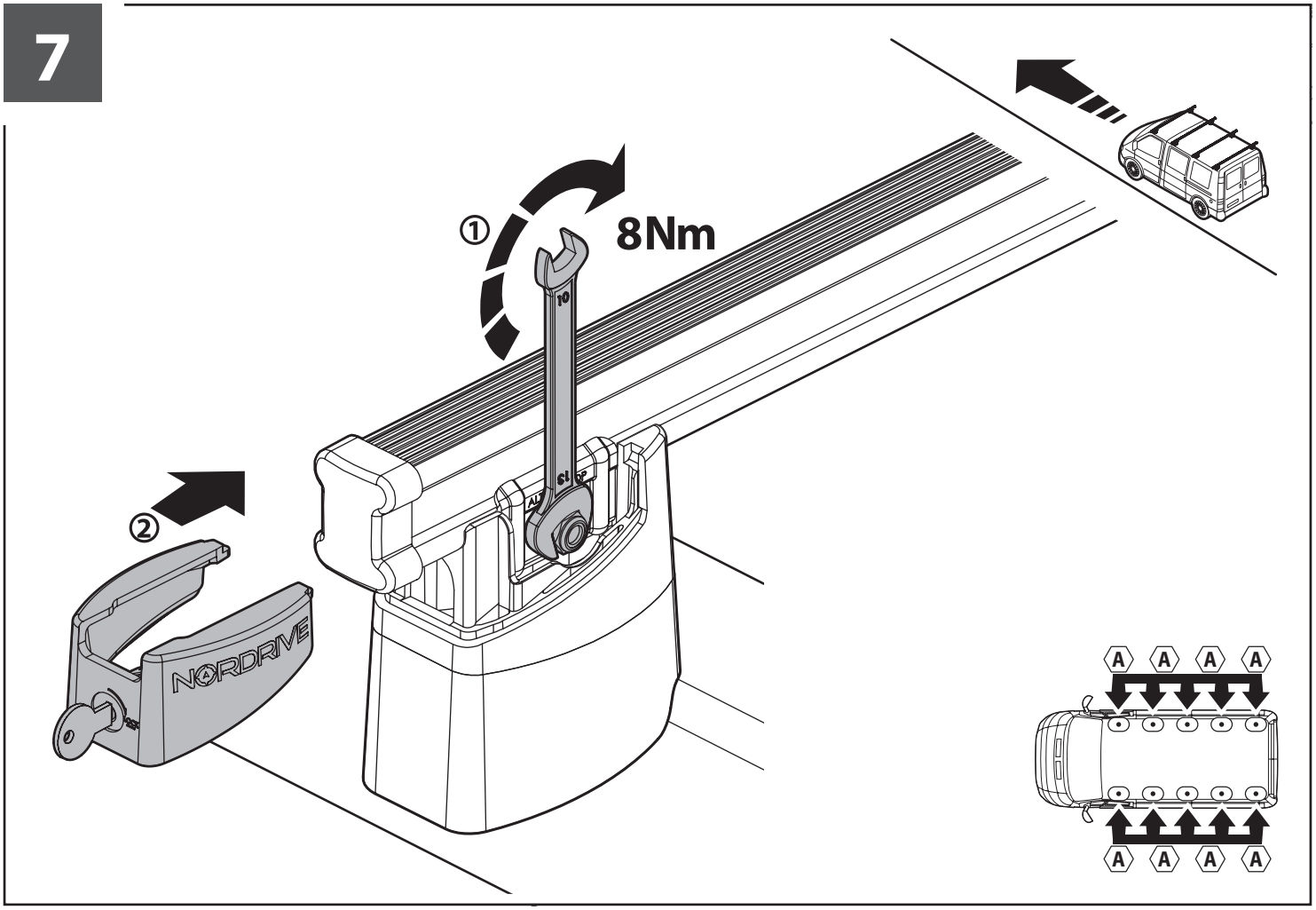
①
8Nm
②
NORDRIVE
A A A A
A A A A

8

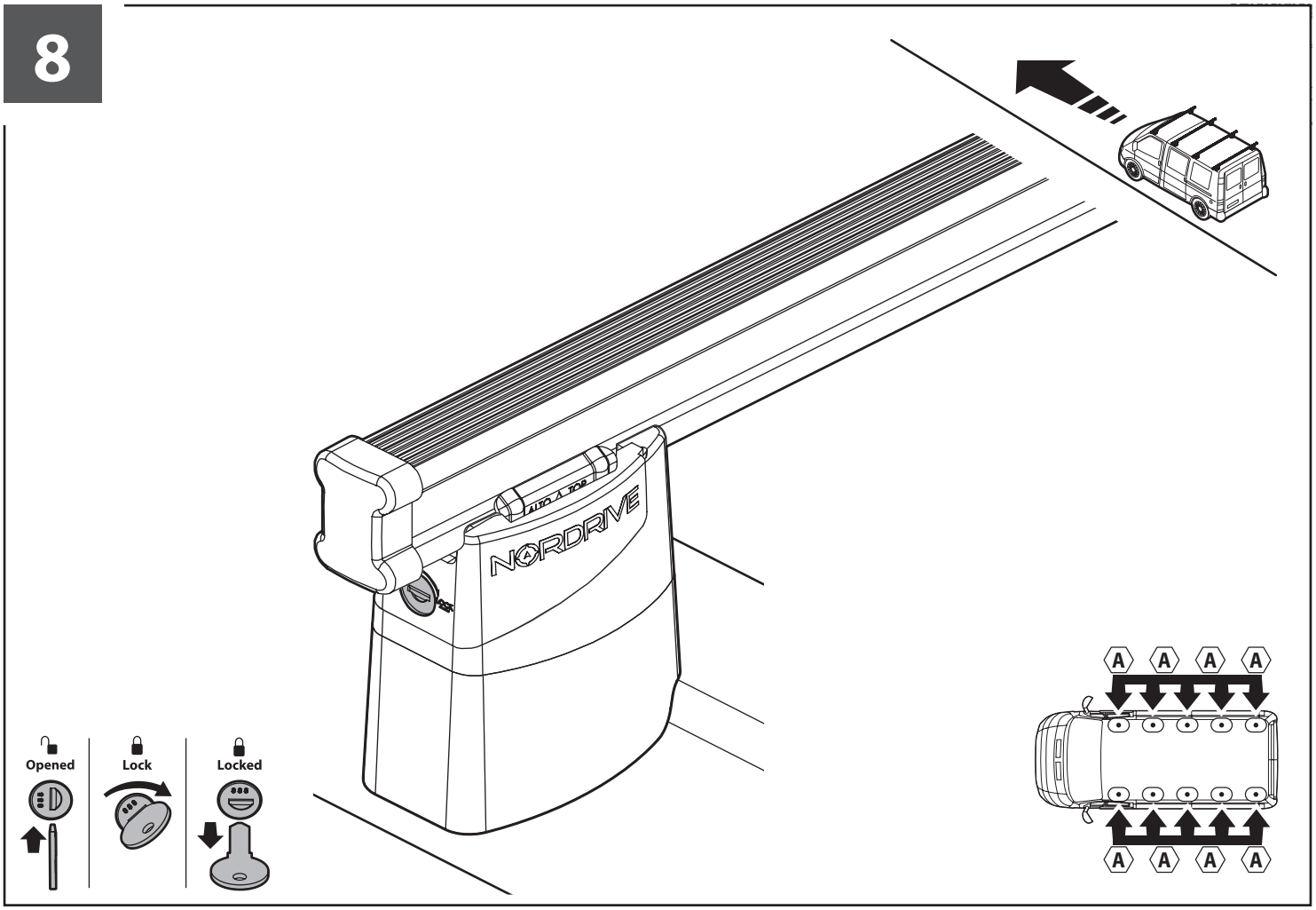
NORDRIVE
Opened
Lock
Locked
A A A A
A A A A

Kargo series

Acciaio / Steel

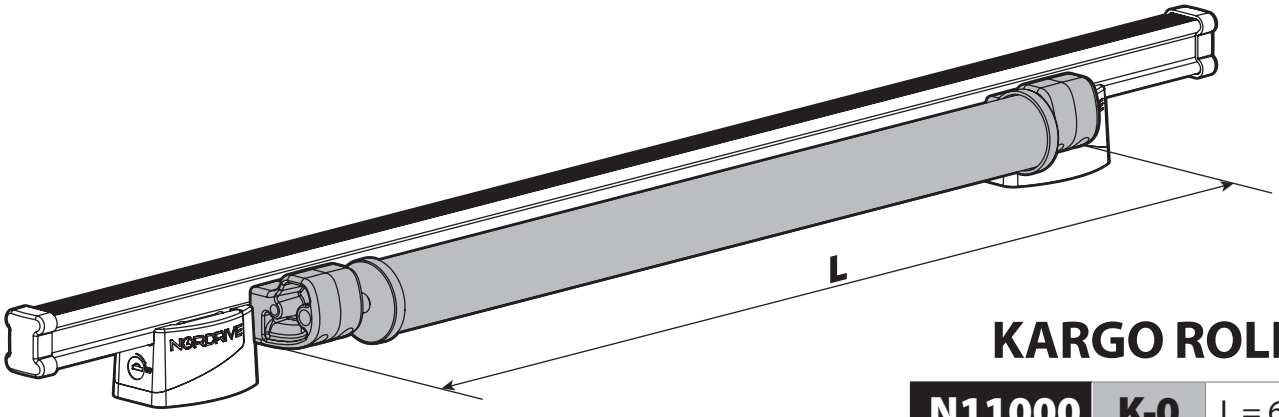

KARGO ROLLER

N11000	**K-0**	L = 64 cm
N11003	**K-7**	L = 96 cm

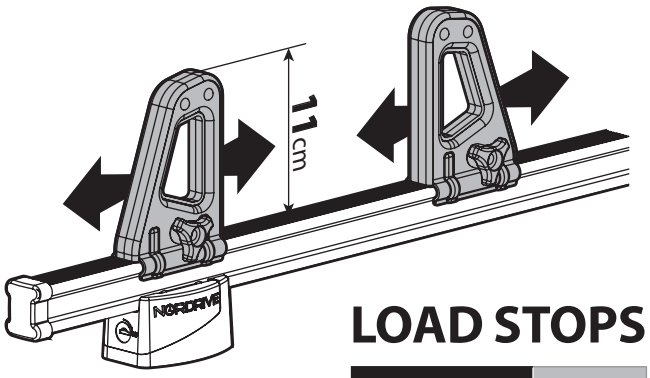

LOAD STOPS

N11001	**K-1**

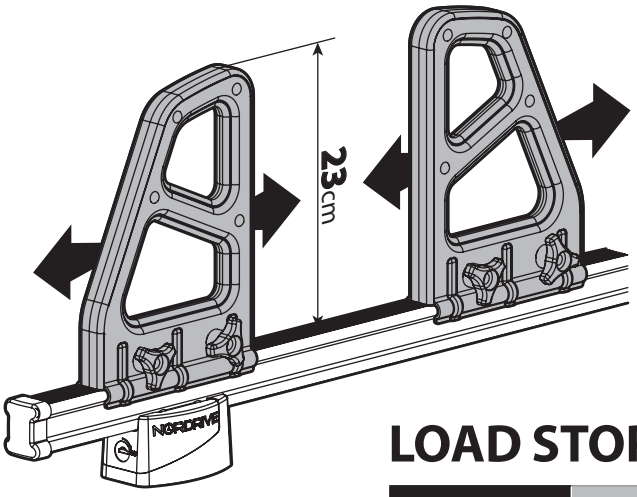

LOAD STOPS

N11002	**K-2**

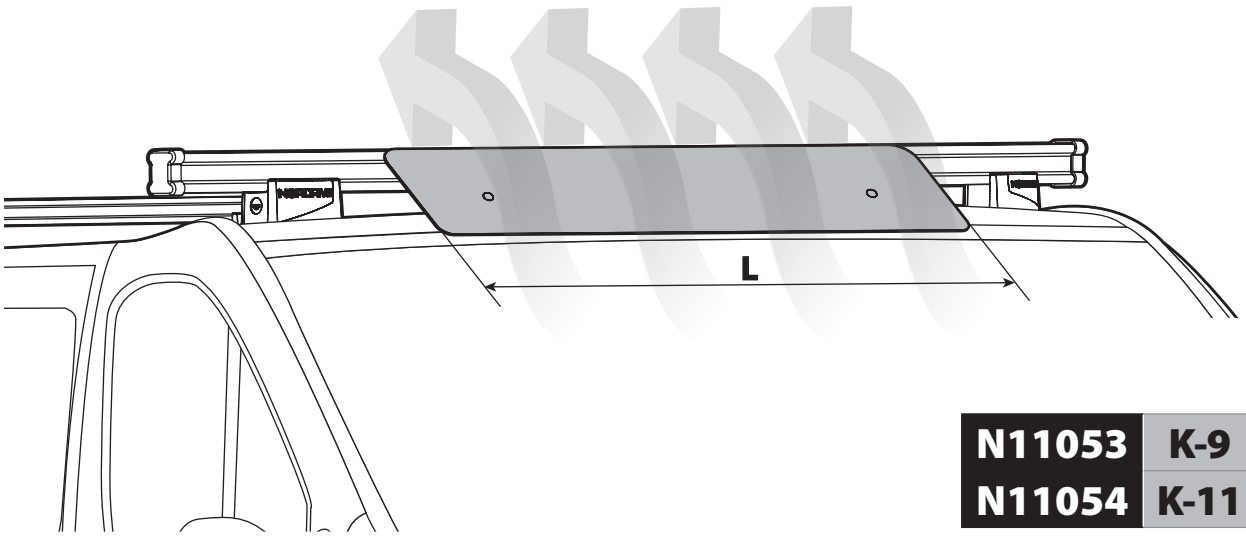

SPOILER

N11053	**K-9**	L = 95 cm
N11054	**K-11**	L = 110 cm

OPTIONALS PER / FOR / FÜR:

Kargo-Plus series

Alluminio / Aluminium

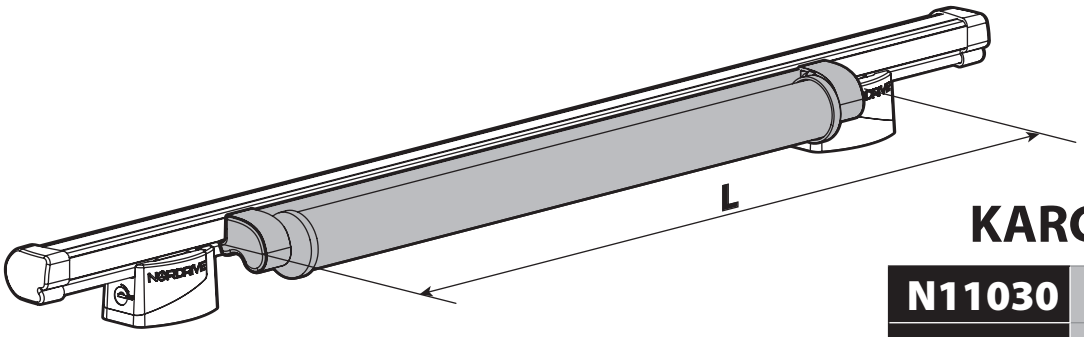

KARGO ROLLER

N11030	KP-0	L = 64 cm
N11034	KP-7	L = 96 cm

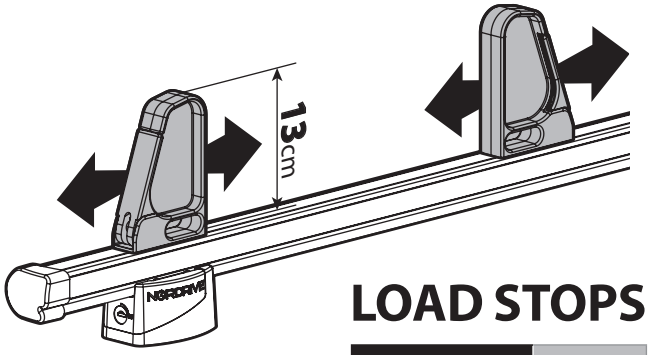

LOAD STOPS

N11031	KP-1

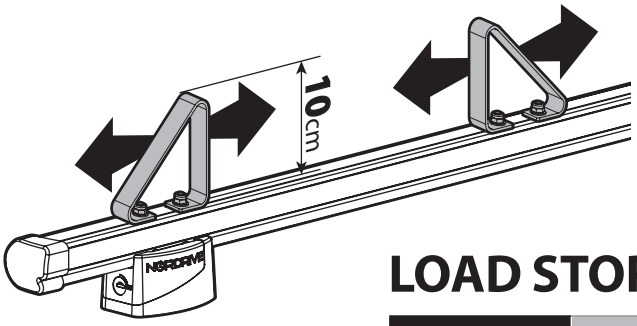

LOAD STOPS

N11036	KP-4

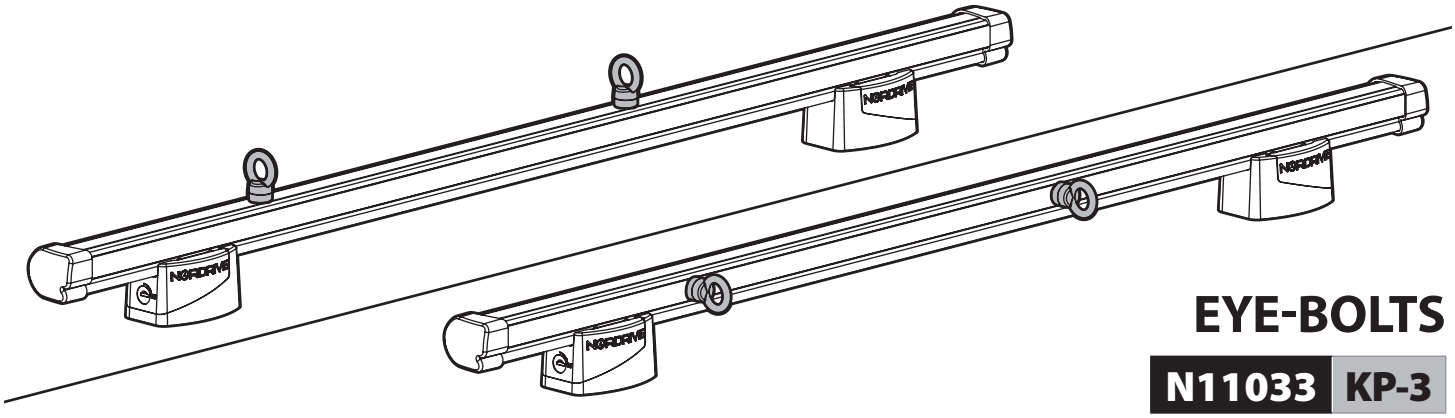

EYE-BOLTS

N11033	KP-3

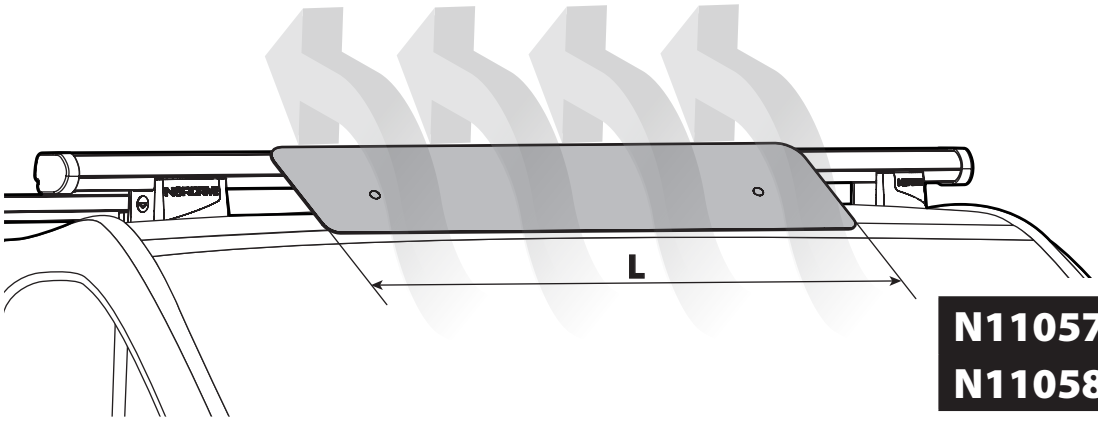

SPOILER

N11057	KP-9	L = 95 cm
N11058	KP-11	L = 110 cm

OPTIONALS PER / FOR / FÜR:

Kargo series

Acciaio / Steel

Kargo-Plus series

Alluminio / Aluminium

KARGO-TUBE

N11050	T200	L = 205 cm
N11051	T300	L =305 cm
N11052	T400	L = 405 cm

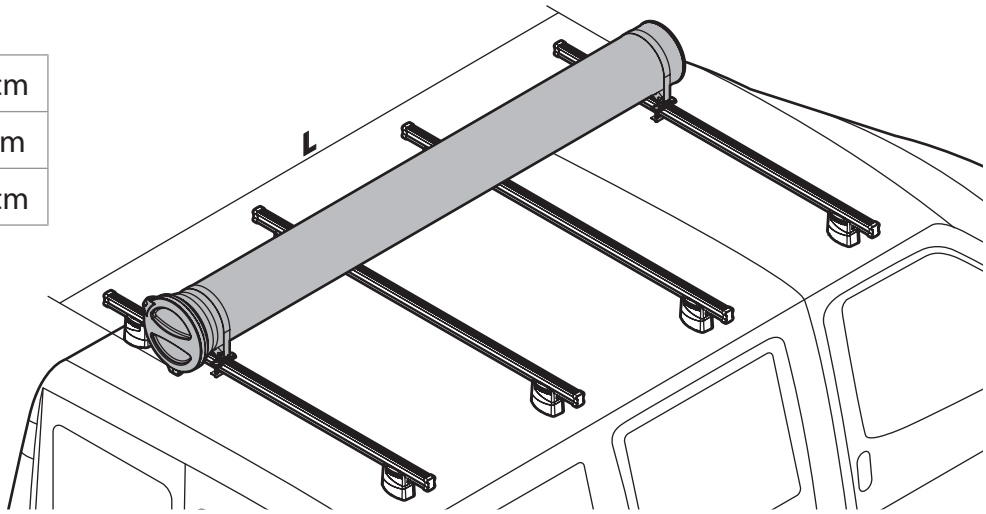

LADDER HOLDER STRAPS

N11065	U-5

LADDER STEP ADAPTER

N11067	U-6

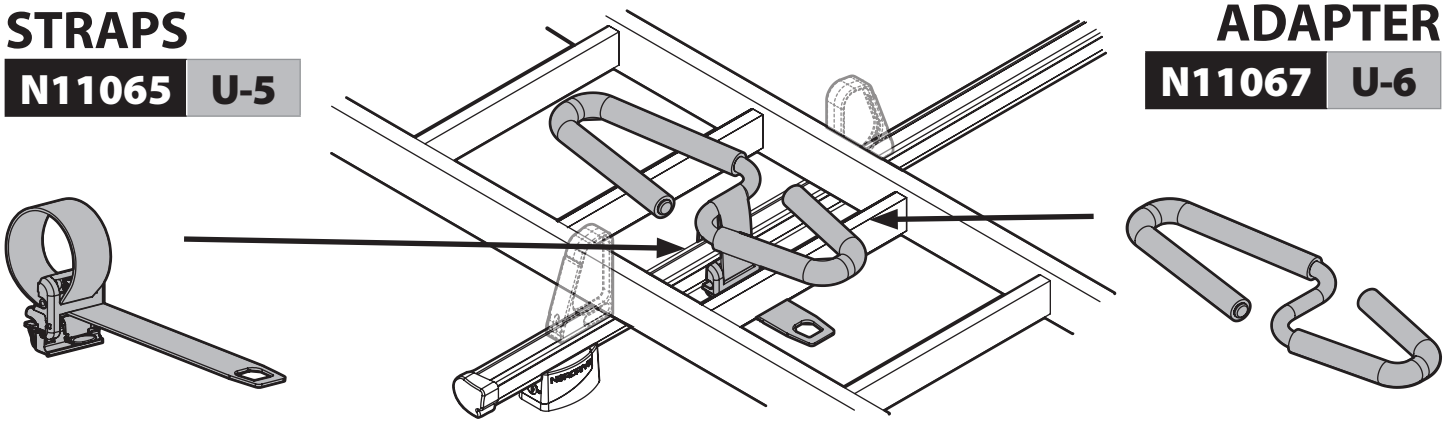

EXTENSION ROLLER

N11020	U-0	L = 64 cm
N11021	U-7	L = 96 cm

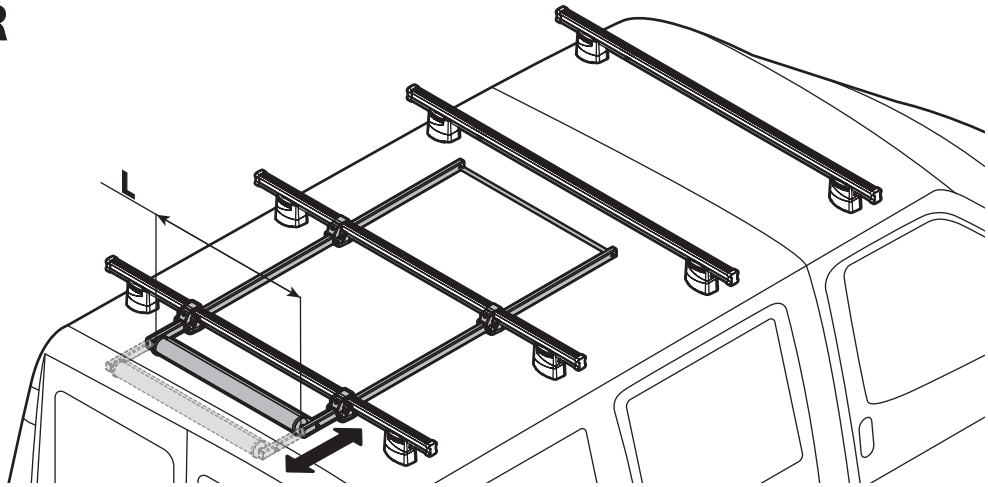

(I) Lotto di produzione da comunicare per eventuali ricambi
(GB) Production lot number to be communicated for any spare parts
(F) Lot de production à communiquer pour toute pièce de rechange
(D) Produktionscharge für eventuelle Ersatzteile
(E) Lote de producción a comunicar por cualquier repuesto

Lot.

NORDRIVE®
TRANSPORT SOLUTIONS

NORDRIVE® is a registered trademark of
LAMPA S.p.A.
Via G. Rossa 53/55, 46019 Viadana (MN) ITALY
Tel. +39 0375 820700
UNI EN ISO 9001:2008 Certified Company
www.nordrive.it
www.lampa.it

91CA0373 r02